PIN VOLTAGES TO GROUND

TUBE	1	2	3	4	5	6	7	8	9
6350 (PWR. OUT)	115	2.8	–	6 AC	6 AC	125	2.8	–	0
5687 (PRE-AMP)	30	0	1.2	6 AC	6 AC	30	24	0	45
6AG5 (RF OSC)	-7.7	0	6 AC	0	114	68			
5965 (RECT. & AUD. OSC)	60	.6 DC 6 AC	.6	6 AC	6 AC	105 AC	105 AC	125	0

VOLTAGES MEASURED WITH 20 K OHMS PER VOLT METER
SWITCH IN UNMOD. POSITION–BANDS SWITCH ON BAND "A"
RF & AF ATTENUATORS SET AT ZERO

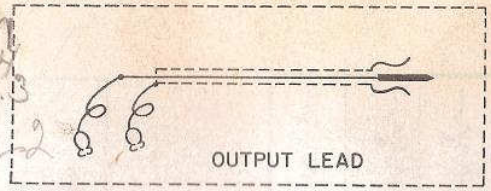

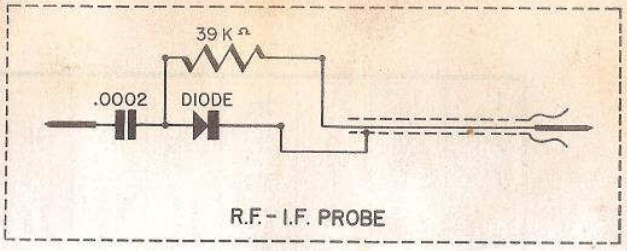

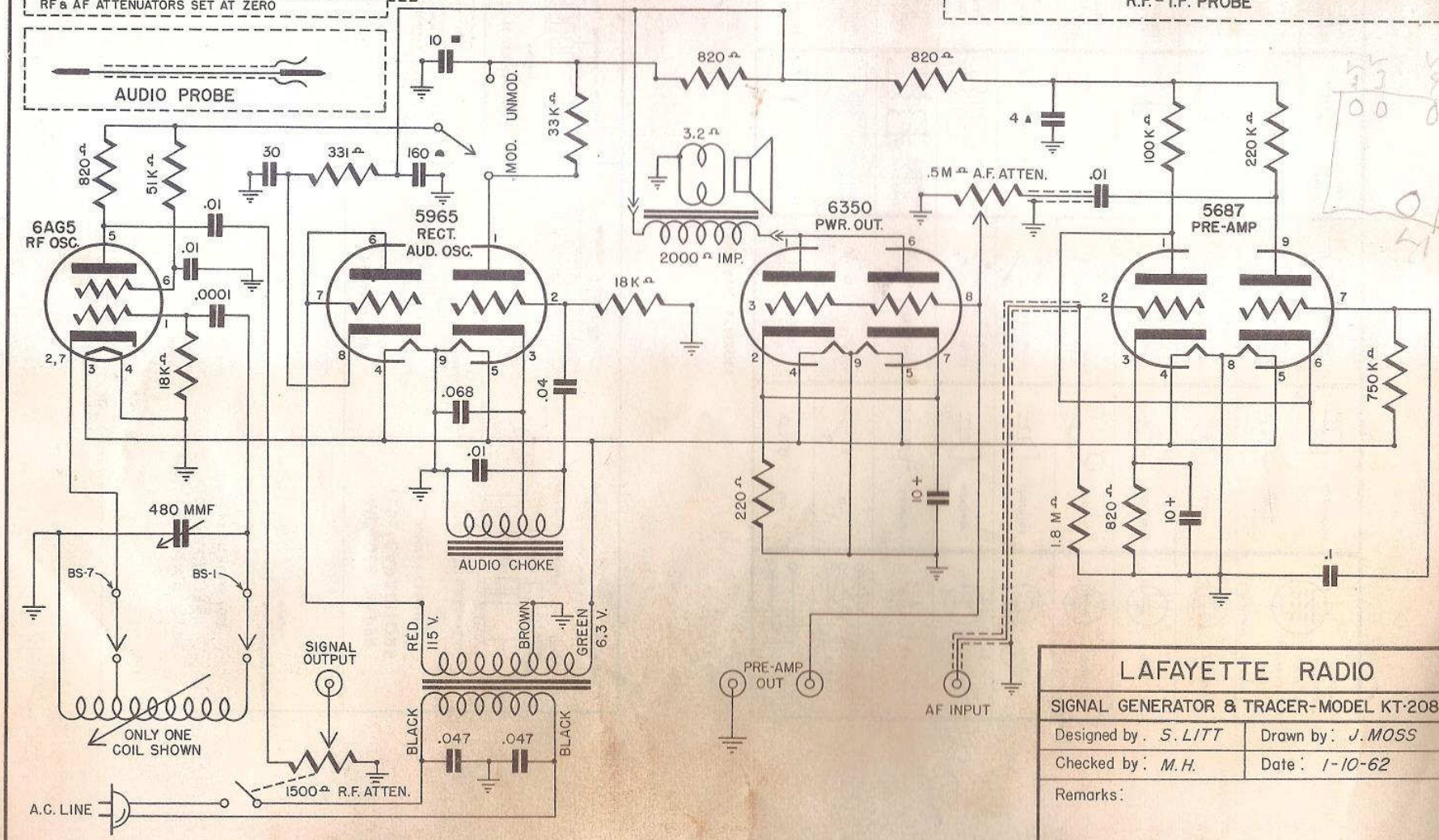

LAFAYETTE RADIO	
SIGNAL GENERATOR & TRACER-MODEL KT-208	
Designed by: S. LITT	Drawn by: J. MOSS
Checked by: M.H.	Date: 1-10-62
Remarks:	